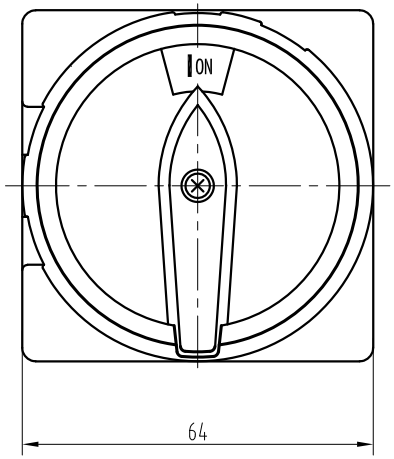

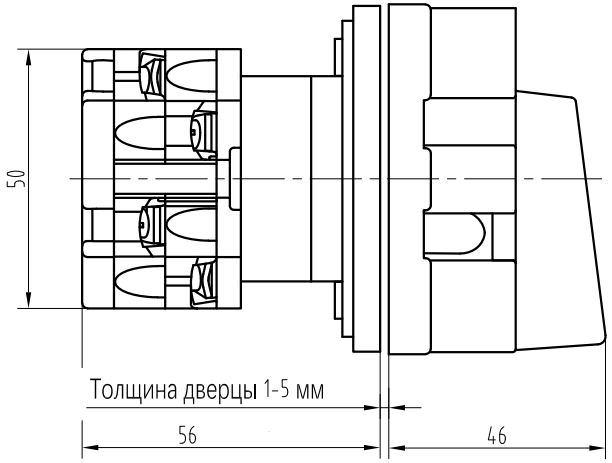

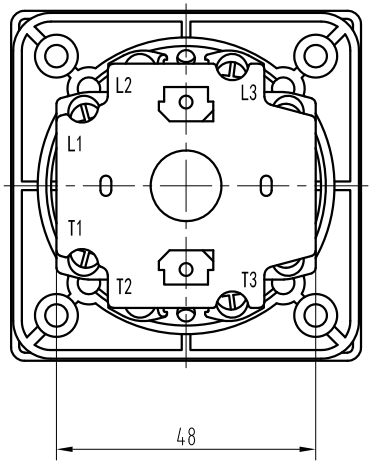

Монтажные размеры

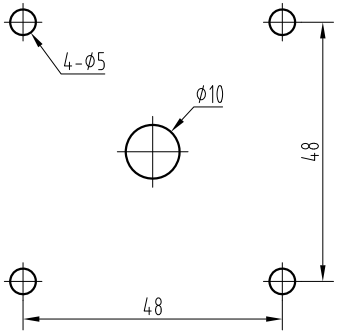

Mark	Number of locations	Change the file number	sign	Date
devise		standardization		
proofread		Validation		
Audit		Approve		
Craft		Date		

Pattern marking				weight	proportion
S	A	B			1:1
How	total	P.	total		

Systeme Electric

Выключатель-Разъединитель

MSD20310R