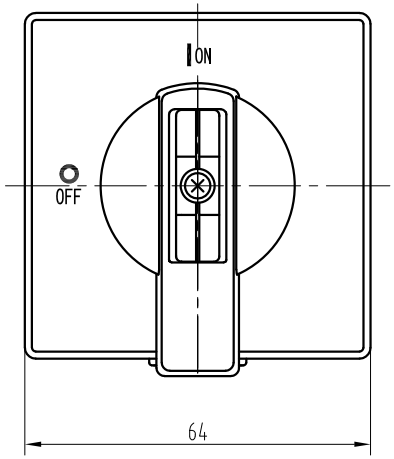

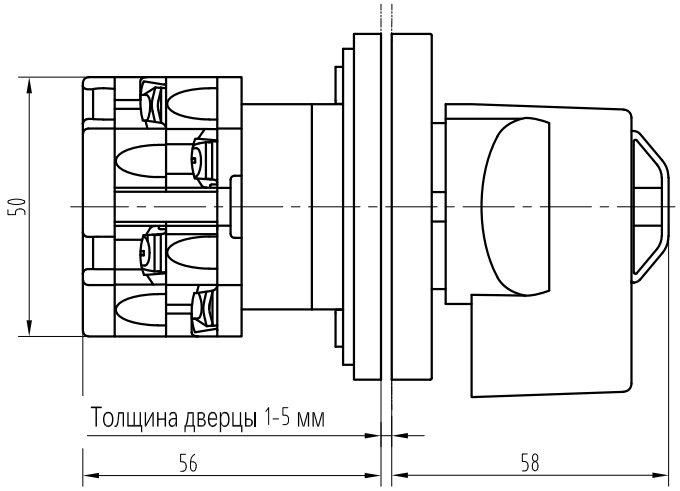

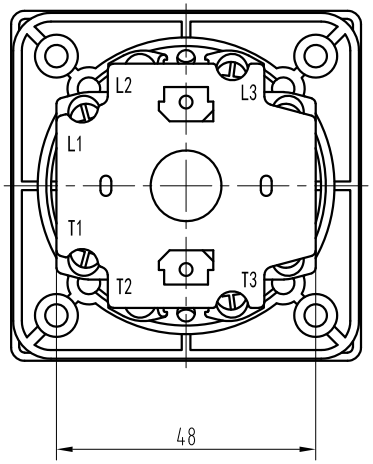

Монтажные размеры

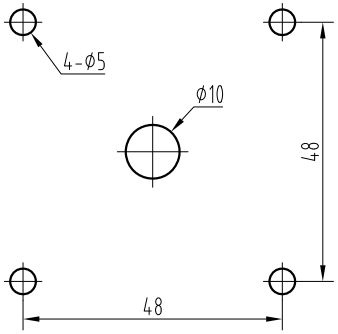

Mark	Number of locations	Change the file number	sign	Date					Systeme Electric
devise			standardization		Pattern marking			weight	proportion	Выключатель-Разъединитель
proofread			Validation		S	A	B		1:1	MSD20360R
Audit			Approve							
Craft			Date		How	total		P.	total	