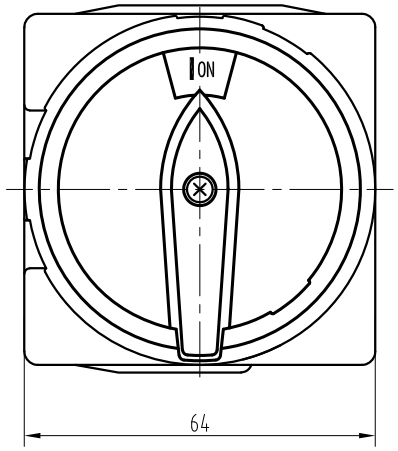

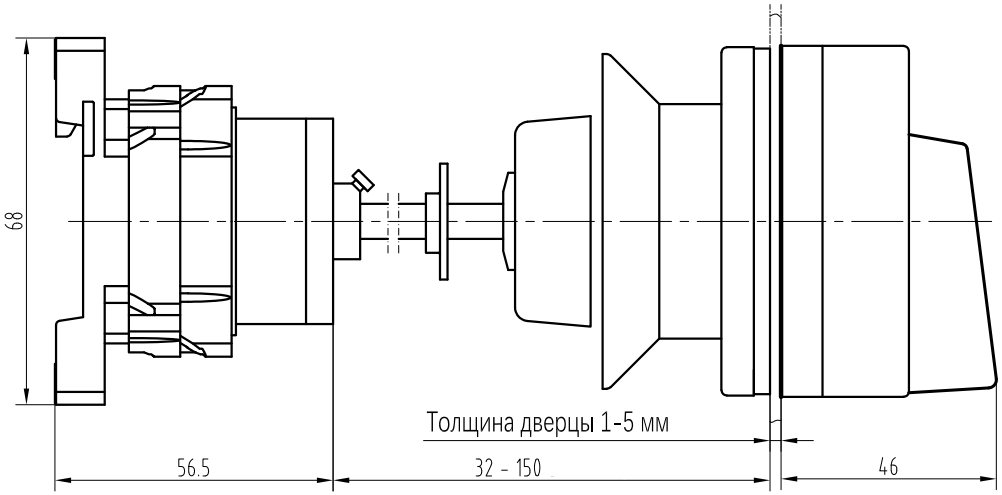

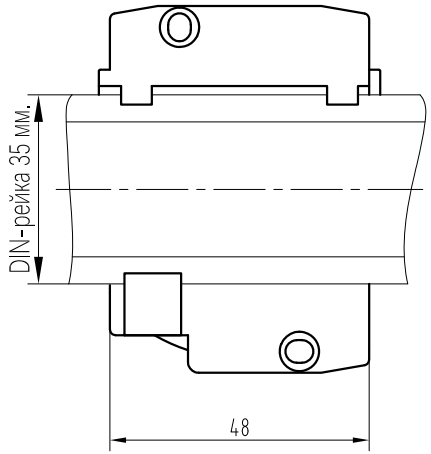

Монтажные размеры

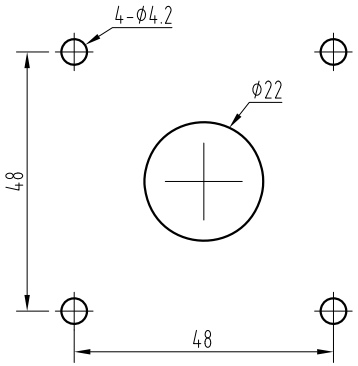

Mark	Number of locations	Change the file number	sign	Date					Systeme Electric
devise		standardization			Pattern marking		weight	proportion	Выключатель-Разъединитель
proofread		Validation			S A B			1:1	MSD20440R
Audit		Approve							
Craft		Date			How total	P.		total	